NUCLEO-C031C6

MB1717

Table of contents

Sheet 1: Project overview (this page)

Sheet 2: MB1717_Top

Sheet 3: STM32_microcontroller_IOs

Sheet 4: Arduino Morpho connectors

Sheet 5: Power

Sheet 6: ST_LINK_V2-1

Sheet 7: HW_Mechanical_Parts

U_MB1717_TOP
MB1717_TOP.SchDoc

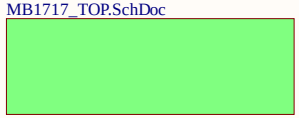

Legend

General comment such as function title, configuration, ...

Text to be added to silkscreen.

Warning text.

Notes to generate the board layout.

OPEN PLATFORM LICENSE AGREEMENT

The Open Platform License Agreement (“Agreement”) is a binding legal contract between you ("You") and STMicroelectronics International N.V. (“ST”), a company incorporated under the laws of the Netherlands acting for the purpose of this Agreement through its Swiss branch 39, Chemin du Champ des Filles, 1228 Plan-les-Ouates, Geneva, Switzerland.

By using the enclosed reference designs, schematics, PC board layouts, and documentation, in hardcopy or CAD tool file format (collectively, the “Reference Material”), You are agreeing to be bound by the terms and conditions of this Agreement. Do not use the Reference Material until You have read and agreed to this Agreement terms and conditions. The use of the Reference Material automatically implies the acceptance of the Agreement terms and conditions.

The complete Open Platform License Agreement can be found on www.st.com/opla.

Title: **Project overview**			life.augmented
Project: **NUCLEO**			
Variant: C031C6			
Revision: B-02		Reference: MB1717	
Size: A4	Date: 26-OCT-2021	Sheet: 1 of 7	

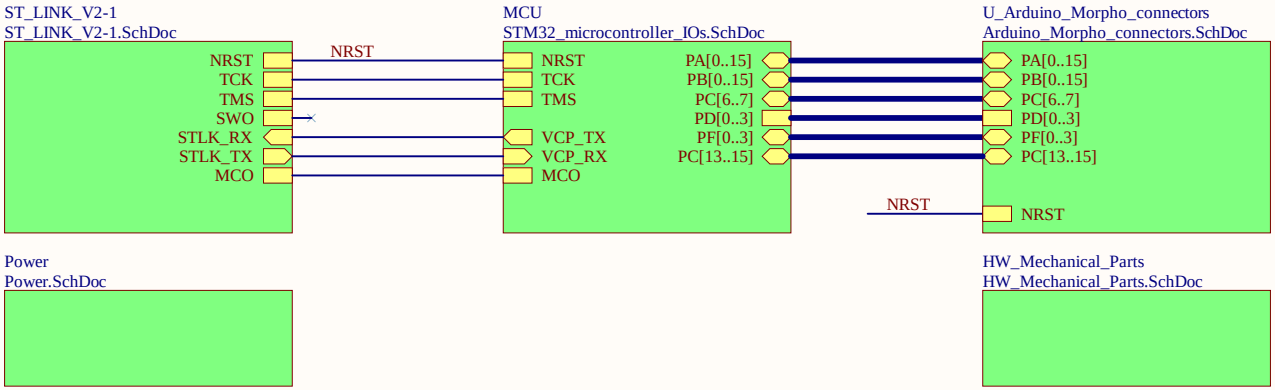

Title: **TOP**		
Project: **NUCLEO**		
Variant: C031C6		
Revision: B-02		Reference: MB1717
Size: A4	Date: 26-OCT-2021	Sheet: 2 of 7

life.augmented

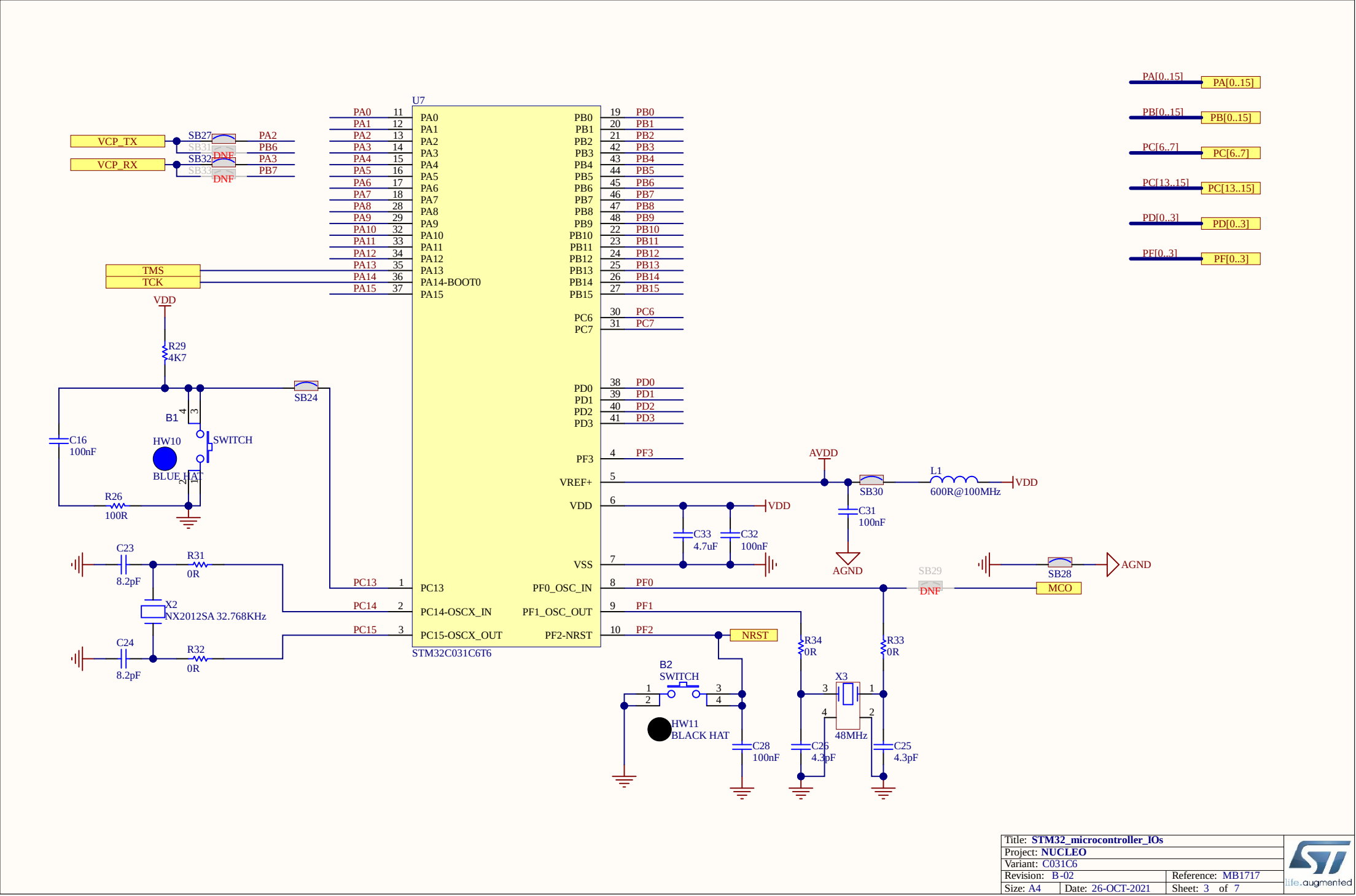

Title: **STM32_microcontroller_IOs**			
Project: **NUCLEO**			
Variant: C031C6			
Revision: B-02		Reference: MB1717	
Size: A4	Date: 26-OCT-2021	Sheet: 3 of 7	

life.augmented

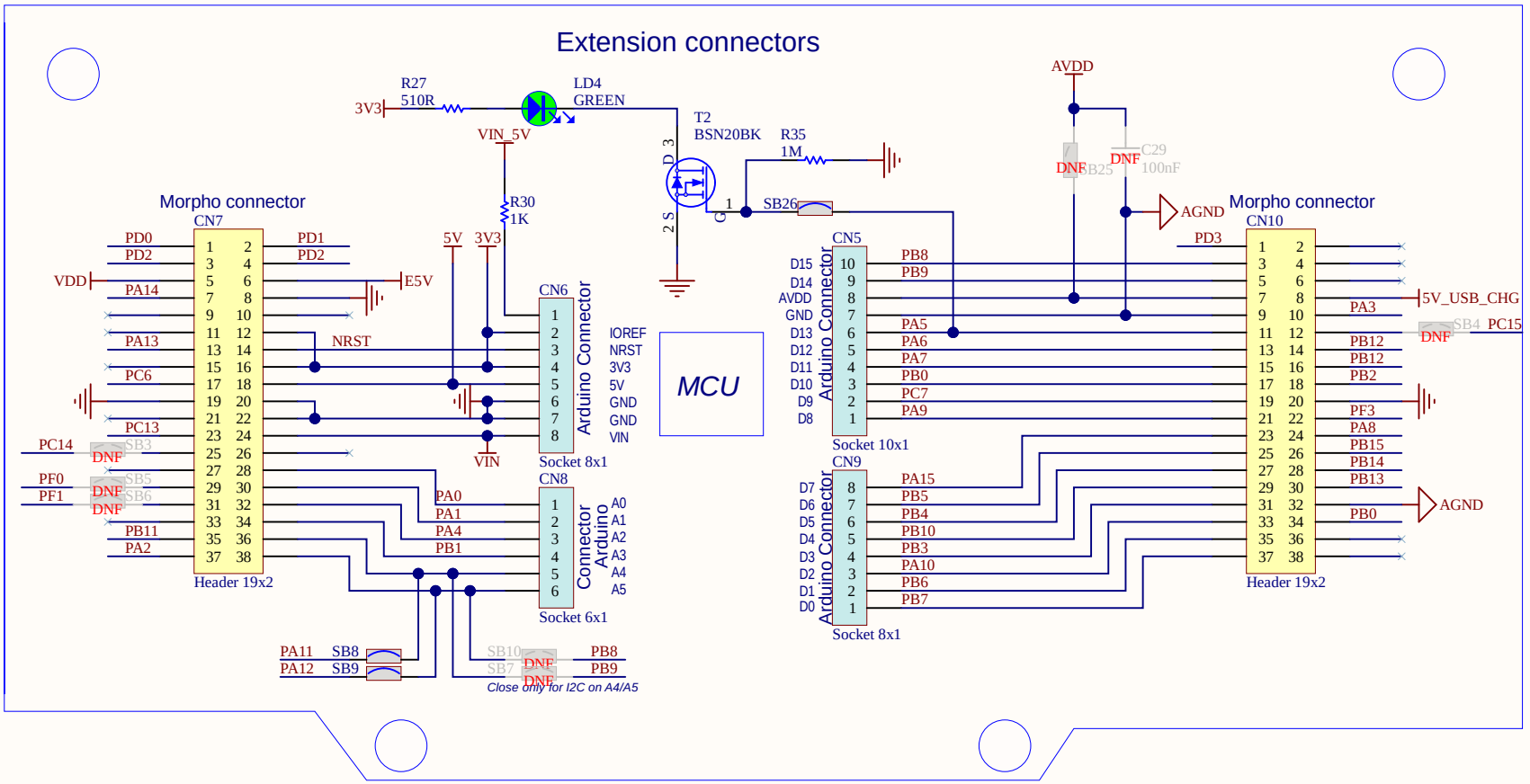

Title: **Connectors**		
Project: **NUCLEO**		
Variant: C031C6		
Revision: B-02		Reference: MB1717
Size: A4	Date: 26-OCT-2021	Sheet: 4 of 7

life.augmented

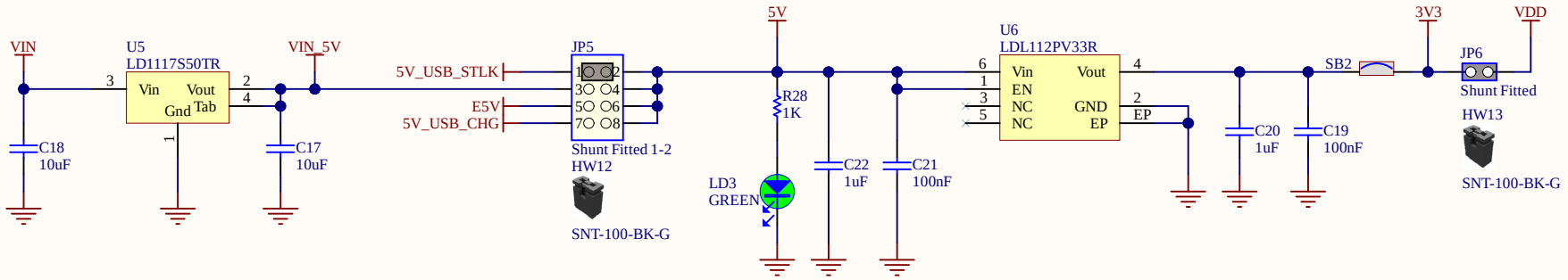

Title: **Power**		
Project: **NUCLEO**		
Variant: C031C6		
Revision: B-02		Reference: MB1717
Size: A4	Date: 26-OCT-2021	Sheet: 5 of 7

life.augmented

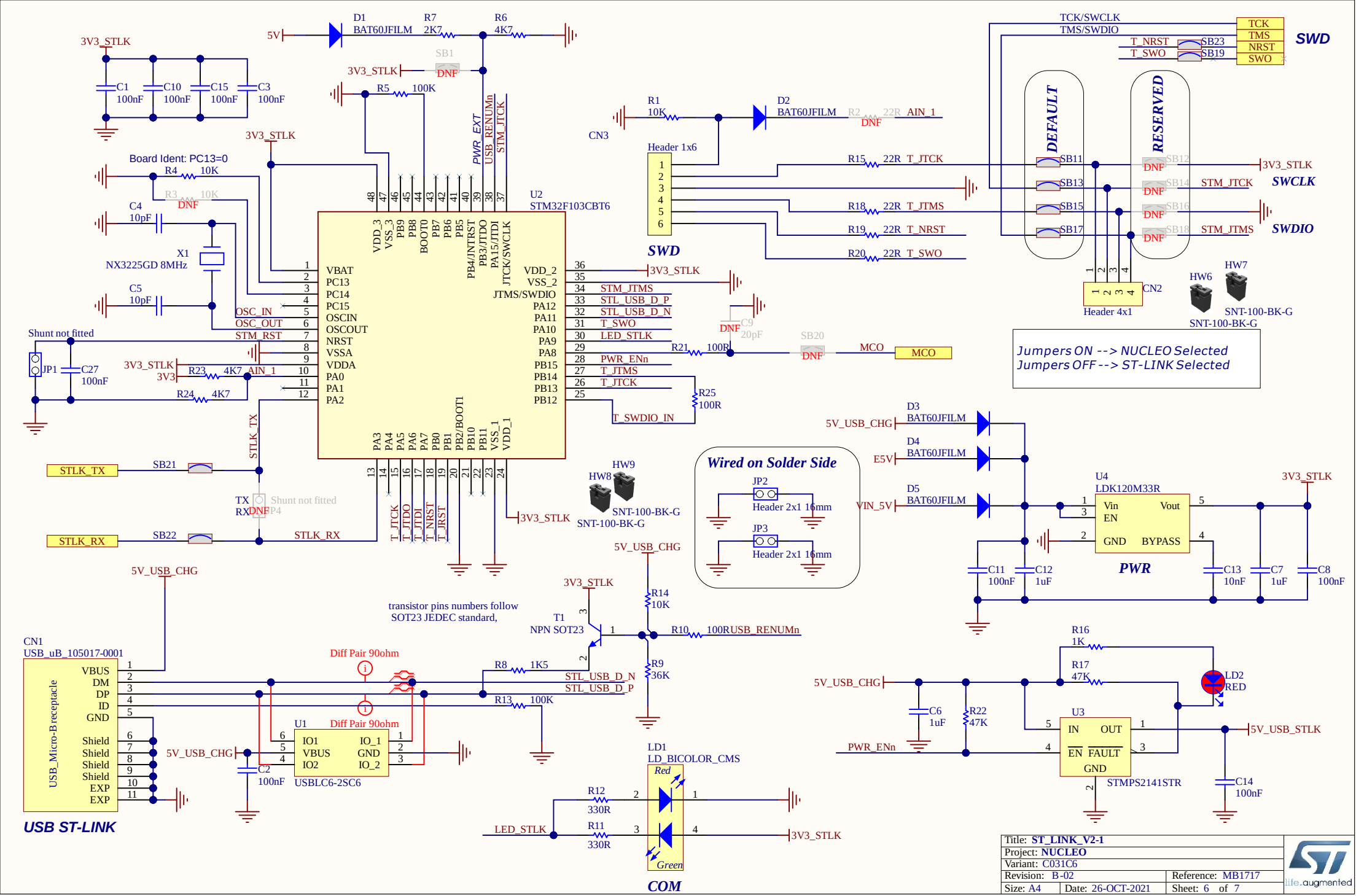
SWD
DEFAULT
RESERVED
SWCLK
SWDIO
Jumpers ON --> NUCLEO Selected
Jumpers OFF --> ST-LINK Selected
Wired on Solder Side
transistor pins numbers follow SOT23 JEDEC standard,
USB ST-LINK
PWR
COM
Board Ident: PC13=0
Shunt not fitted
Diff Pair 90ohm
Header 1x6
Header 4x1
Header 2x1 16mm
SNT-100-BK-G
USB_Micro-B receptacle
USBLC6-2SC6
STMPS2141STR
LD_BICOLOR_CMS
NX3225GD 8MHz
STM32F103CBT6
LDK120M33R
BAT60JFILM
NPN SOT23
Title: ST_LINK_V2-1
Project: NUCLEO
Variant: C031C6
Revision: B-02
Reference: MB1717
Size: A4
Date: 26-OCT-2021
Sheet: 6 of 7

HW Mechanical parts

HW2
Sticker board

STICKER BOARD

HW1

STICKER PRODUCT

Sticker product

HW4
MB1717

PCB

Title: **HW Mechanical parts**		
Project: **NUCLEO**		
Variant: C031C6		
Revision: B-02		Reference: MB1717
Size: A4	Date: 26-OCT-2021	Sheet: 7 of 7

life.augmented

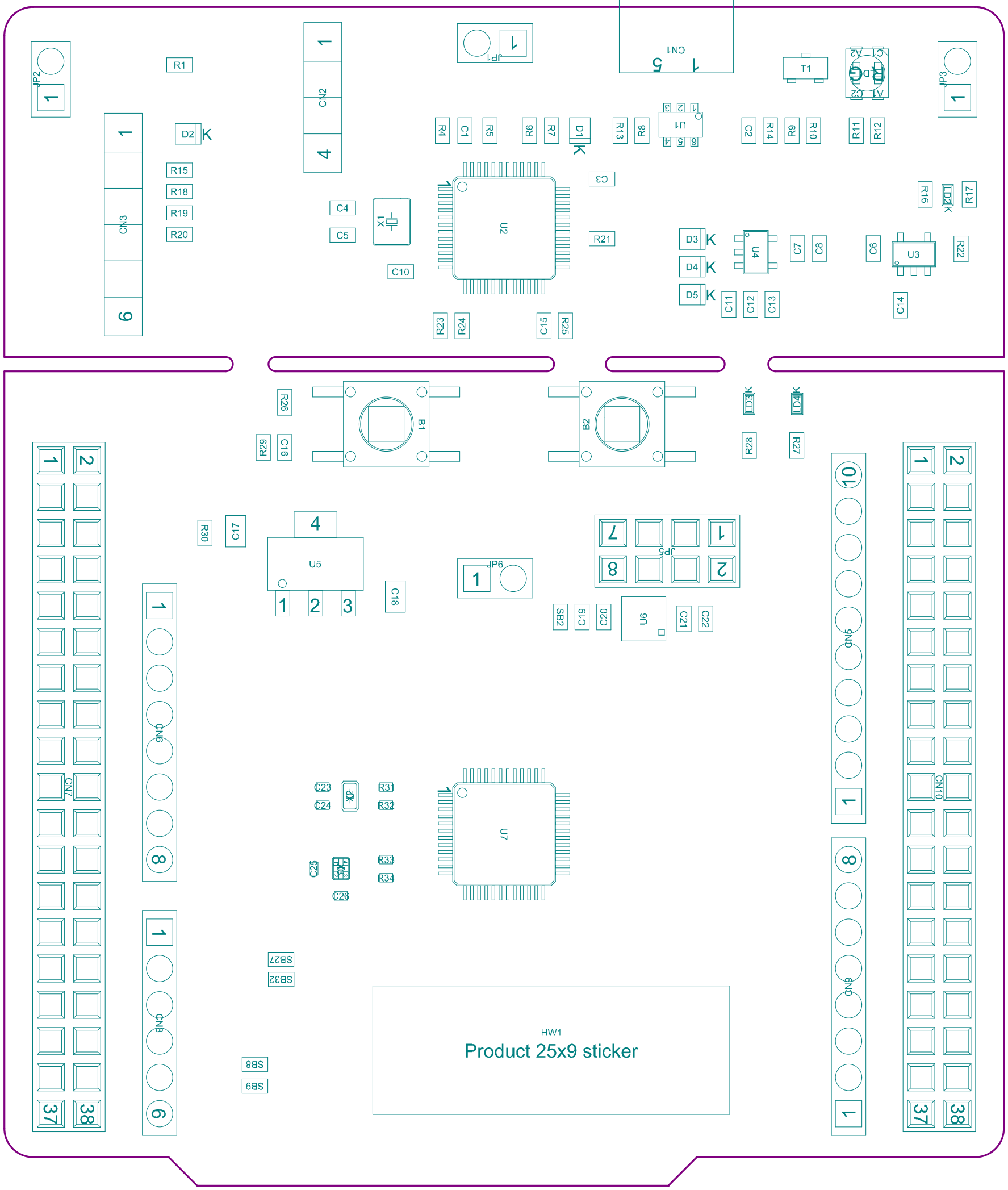

Project: NUCLEO	
Layer: M14-Top Assembly	Gerber: .GM14
Variant: C031C6	Ref: MB1717
Date: 26-OCT-2021	Rev: B

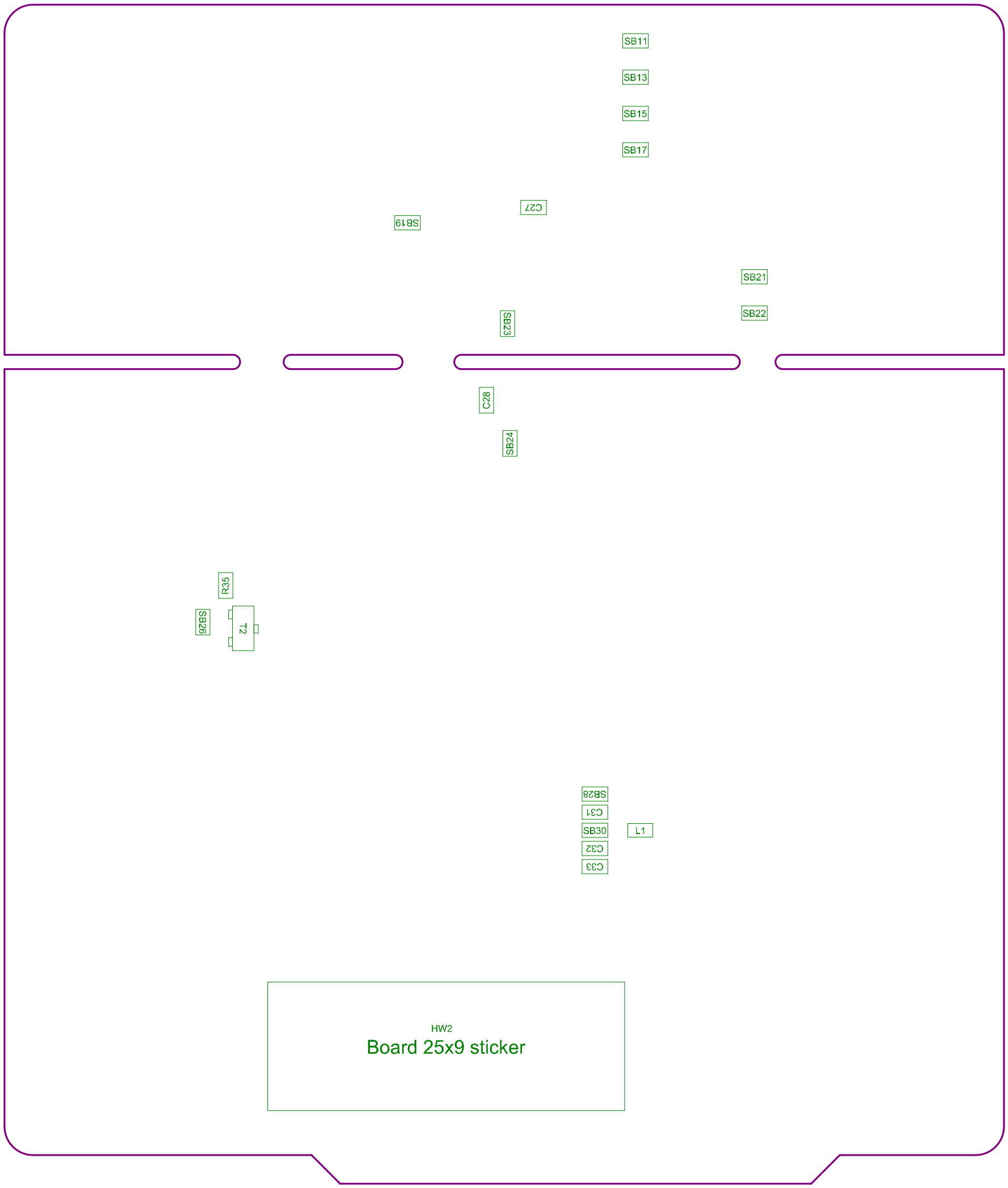

Project: NUCLEO	
Layer: M15-Bottom Assembly	Gerber:.GM15
Variant: C031C6	Ref: MB1717
Date: 26-OCT-2021	Rev: B

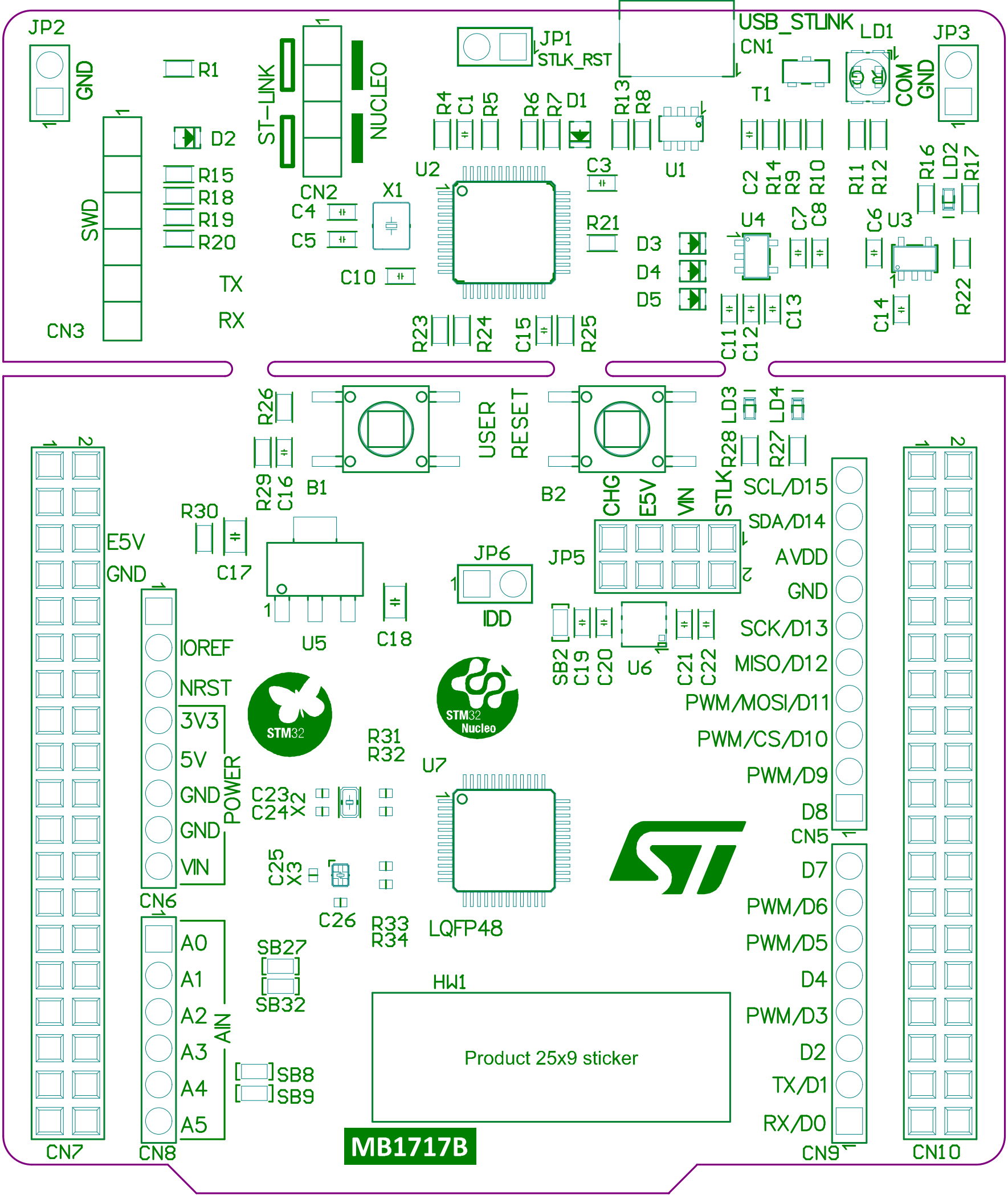

Top-Overlay

Mid-Overlay

.GTO

.GTO

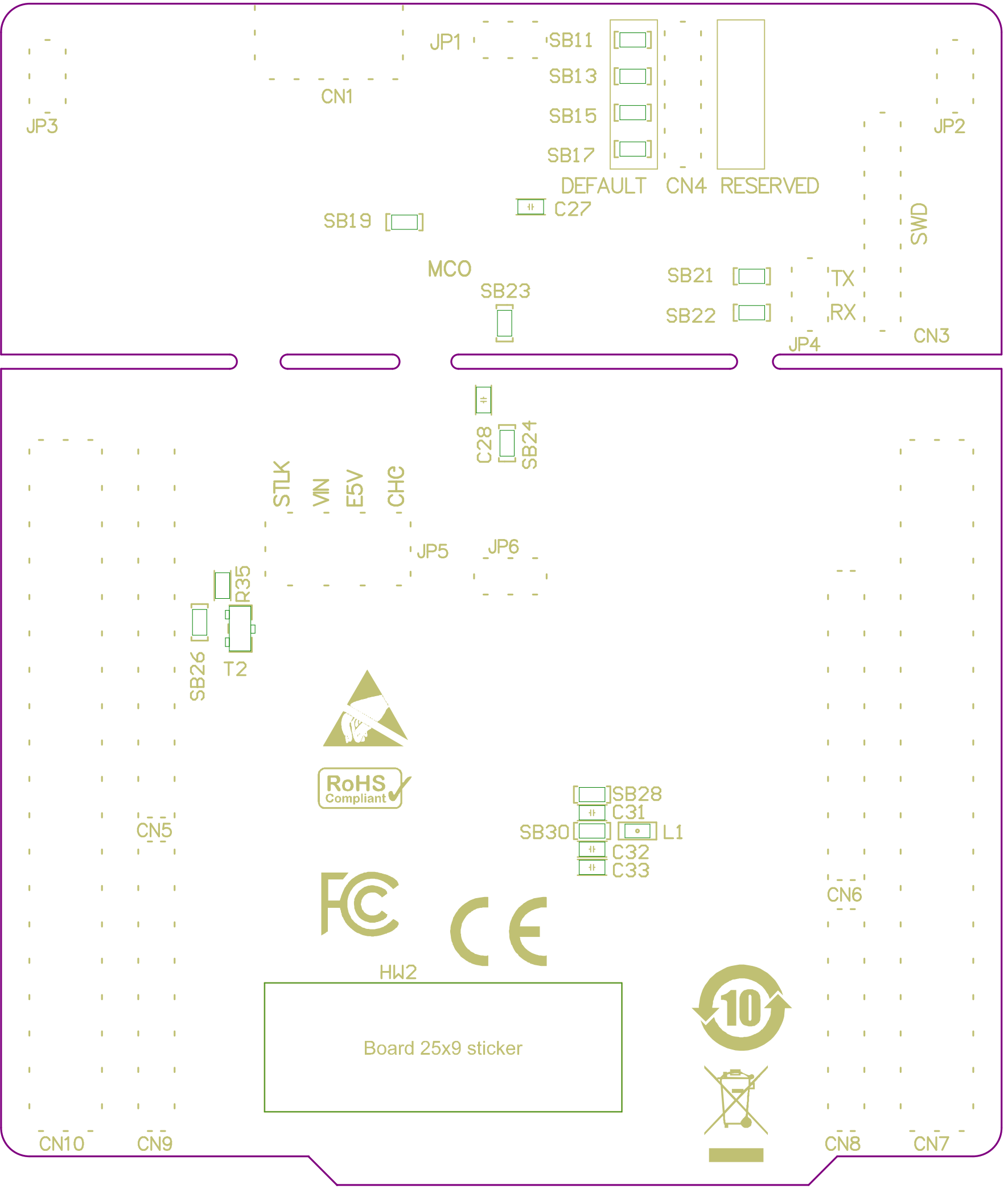

M15-Bottom Assembly .GM15

Bottom Overlay